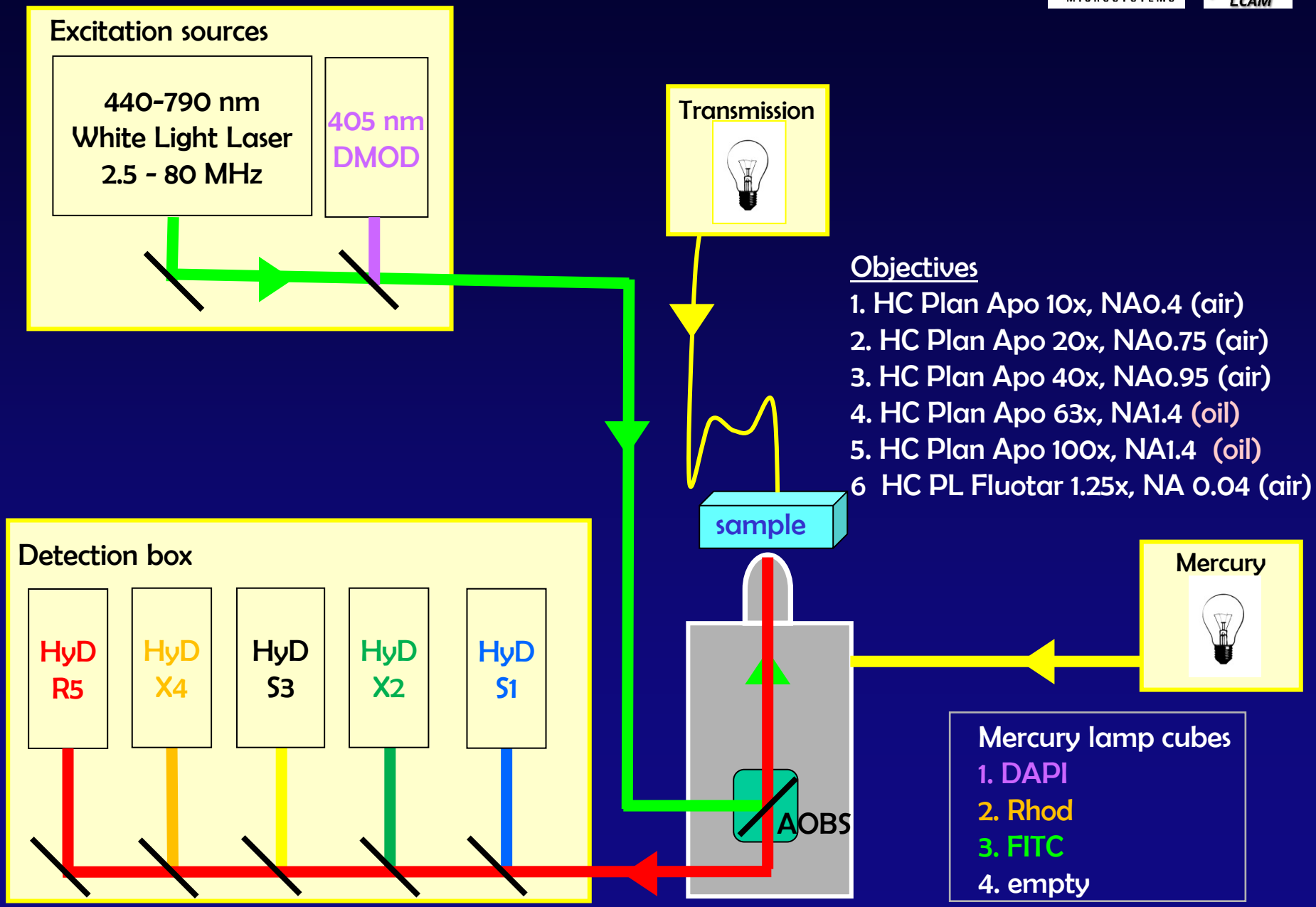Leica Stellaris filters - May 2023